106-249

Ness 3G GSM Dialler

Compatible with all Ness control panels

Just add your own SIM card

Full time 3G GSM monitoring – No landline required!

Includes Power Supply, Internal Backup Battery, External Antenna

Ness 106-249 GSM Dialler provides a full time 3G GSM pathway for alarm diallers to communicate in the absence of a land line.

Ideal for “Naked phone line” households, remote locations and anywhere you need easy and reliable dialler monitoring via GSM.

- Plug-and-go operation - no programming required.
- Antenna with magnetic base supplied - long cable allows the unit to be installed in a secure housing.
- LCD status display.
- Plug pack powered with onboard battery backup.

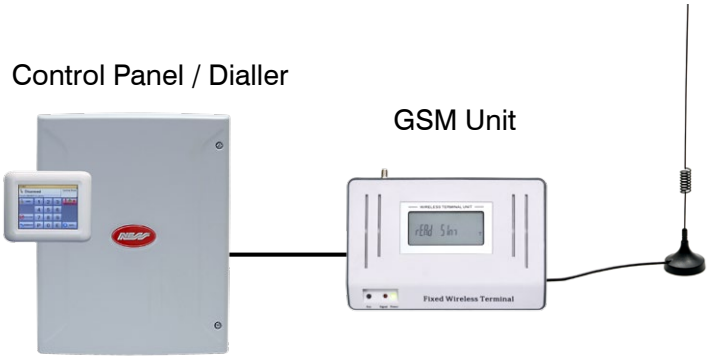

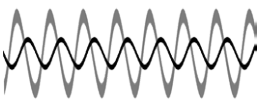

3G GSM pathway to central station or any phone.

NESS CORPORATION

Innovative Electronic Solutions

Ness 3G GSM Dialler

106-249

SPECIFICATIONS

GSM COMPATIBILITY	3G GSM
SIM CARD	Requires a 3G compatible GSM SIM card (not supplied).
ALARM PANEL COMPATIBILITY	Compatible with all Ness alarm diallers in Contact ID DTMF and Voice formats
OPERATING VOLTAGE	12VDC plug pack supplied
BATTERY BACKUP	Internal rechargeable battery
BATTERY BACKUP TIME max.	48hrs
POWER CONSUMPTION	25mA (standby), 300mA (communicating)
ANTENNA	3dB whip with magnetic base, 2.9m cable length
DIMENSIONS	175 x 115 x 35mm
WEIGHT	200g
OPERATING TEMPERATURE	0°C to +50°C

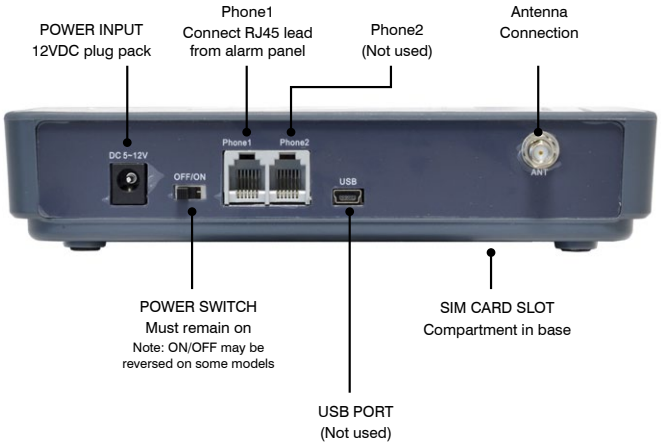

Innovative Electronic Solutions
www.nesscorporation.com

NSW Ph 02 8825 9222 sales@ness.com.au | **VIC** Ph 03 9875 6400 nessmelb@ness.com.au | **QLD** Ph 07 3399 4910 nessbris@ness.com.au | **WA** Ph 08 9328 2511 nessper@ness.com.au | **SA** Ph 08 8152 0000 adelaide@ness.com.au

© 2015 Ness Corporation Pty Ltd ABN 28 069 984 372. Photos are used for illustrative purposes only. Design and specifications may vary. See the Ness Corporation web site for full warranty details.